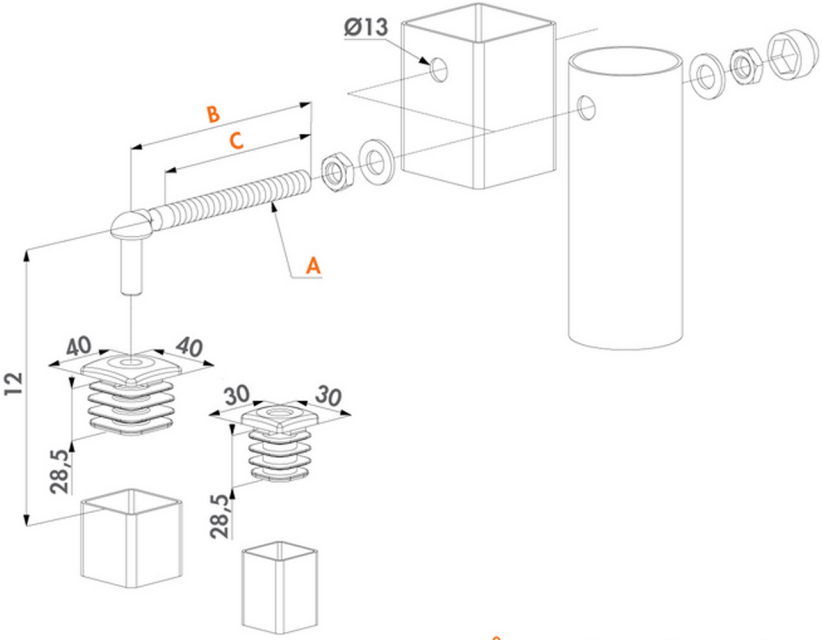

	kg	A	B	C
GBM12-xx-130	75 kg	M12	130	110
GBM12-xx-150	75 kg	M12	150	130